Dragster Design

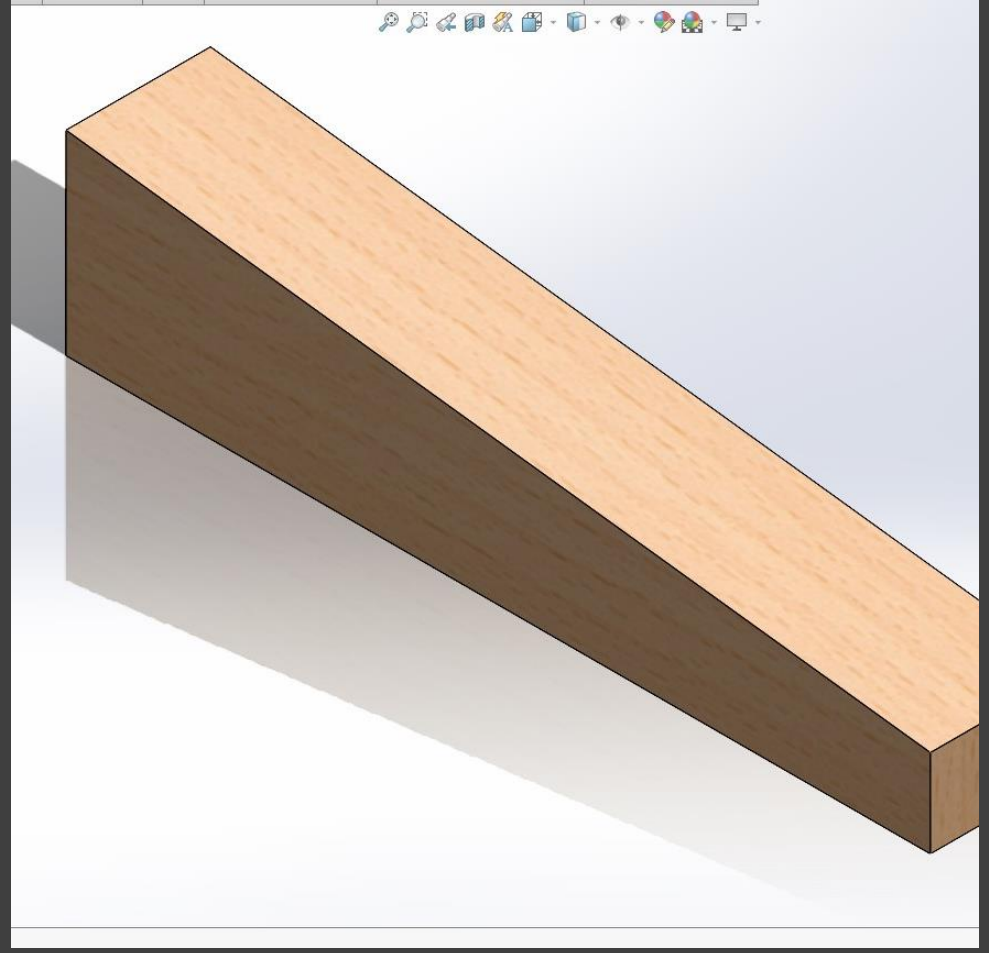

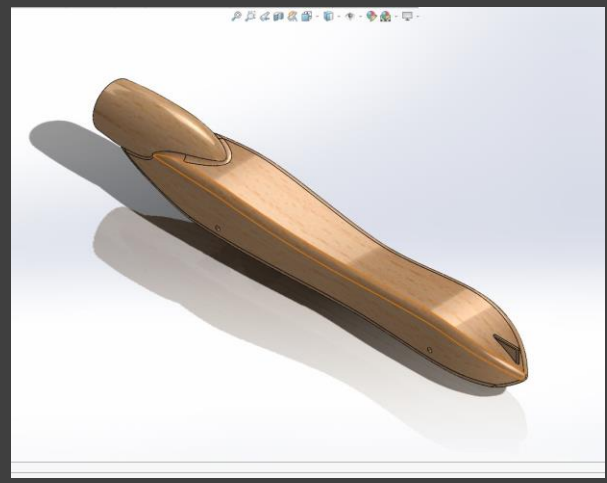

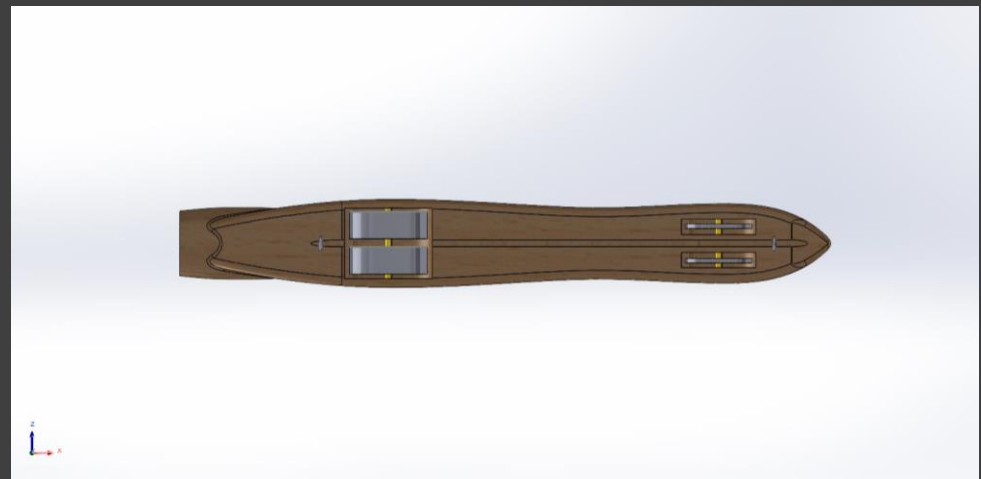

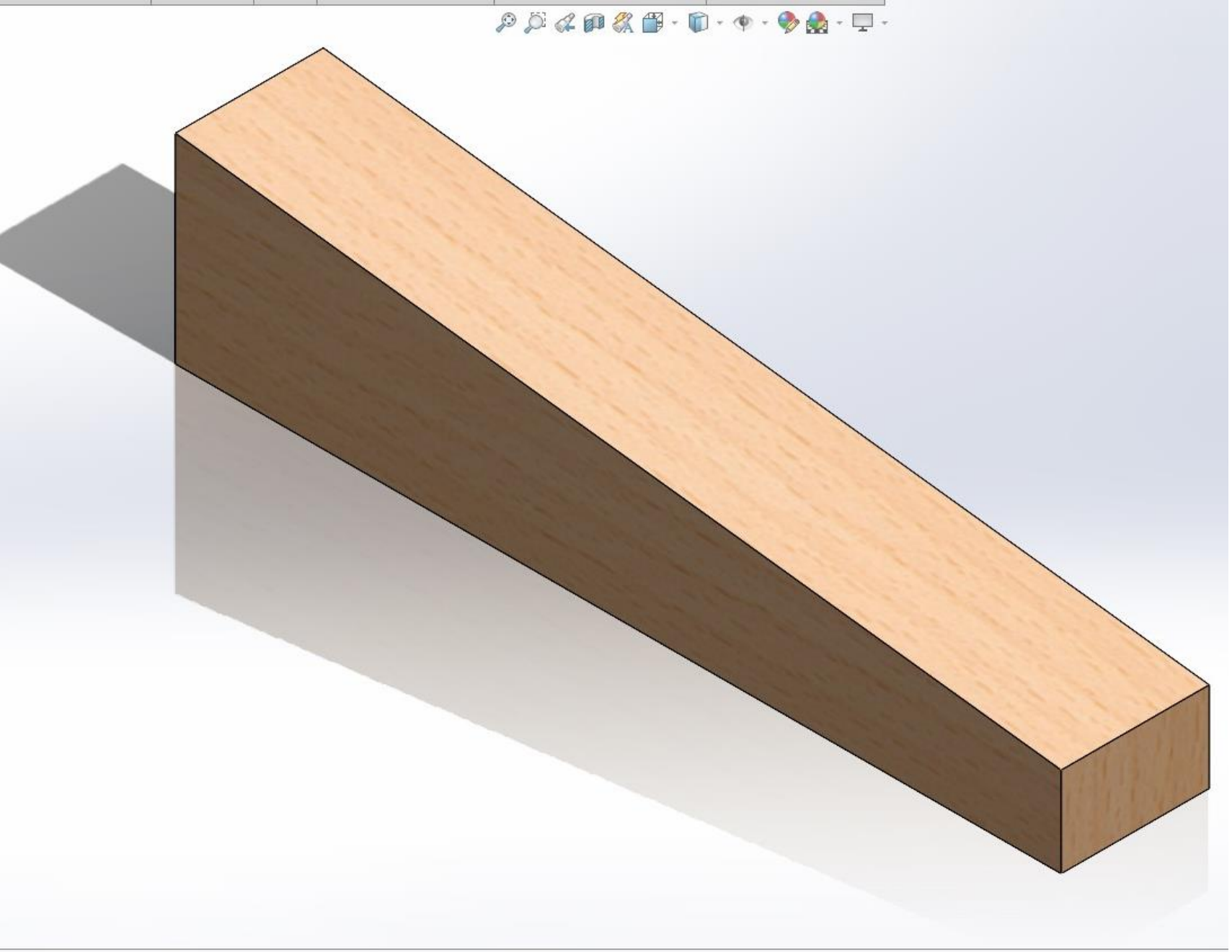

Dragster Block

- The dragster was modeled in Solidworks.
- The dragster used a balsa wood blank from Pitsco.

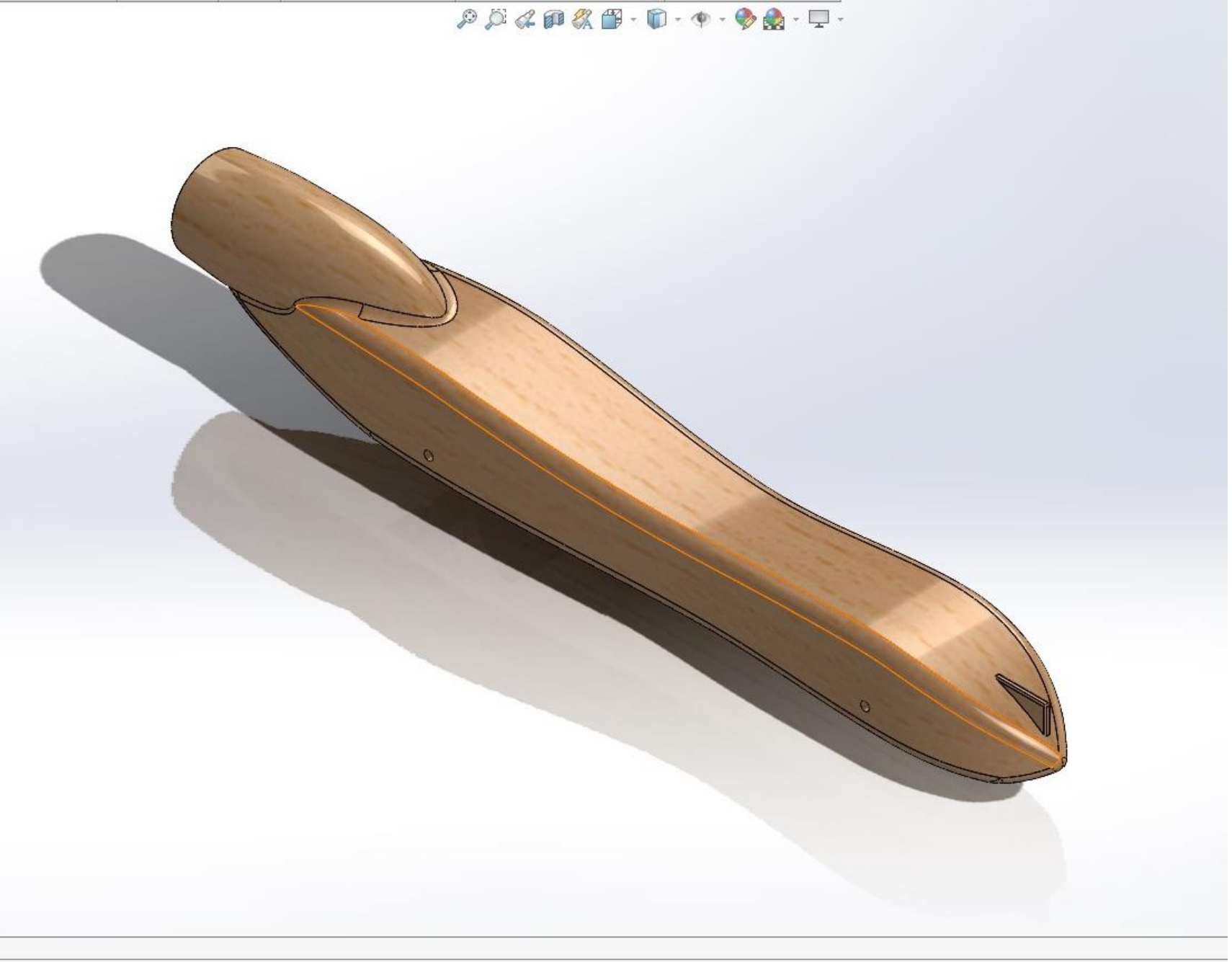

Designing the Dragster

- The dragster was modeled and had axle holes and wheel wells cut out in Solidworks.
- There is a triangle at the front of the dragster which is designed to catch the laser at the end of the dragster track as quickly as possible.

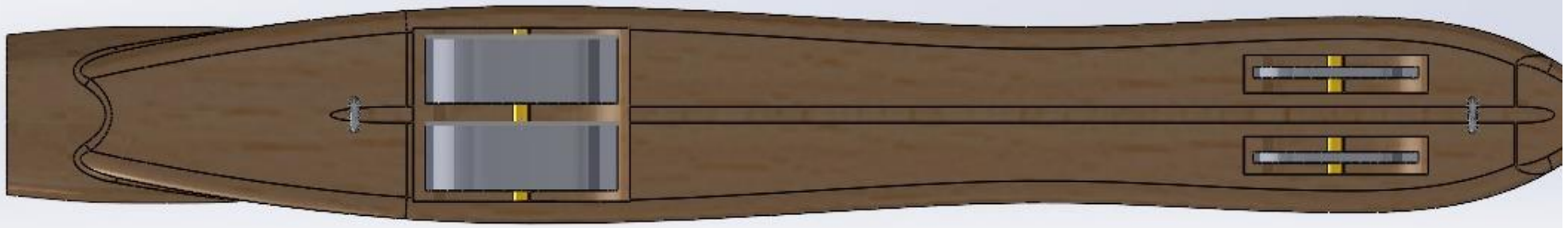

Final Model

- The final assembled dragster also includes wheels, axles, screw eyes, and bearings.
- The wheel were modeled in Solidworks and 3D printed.

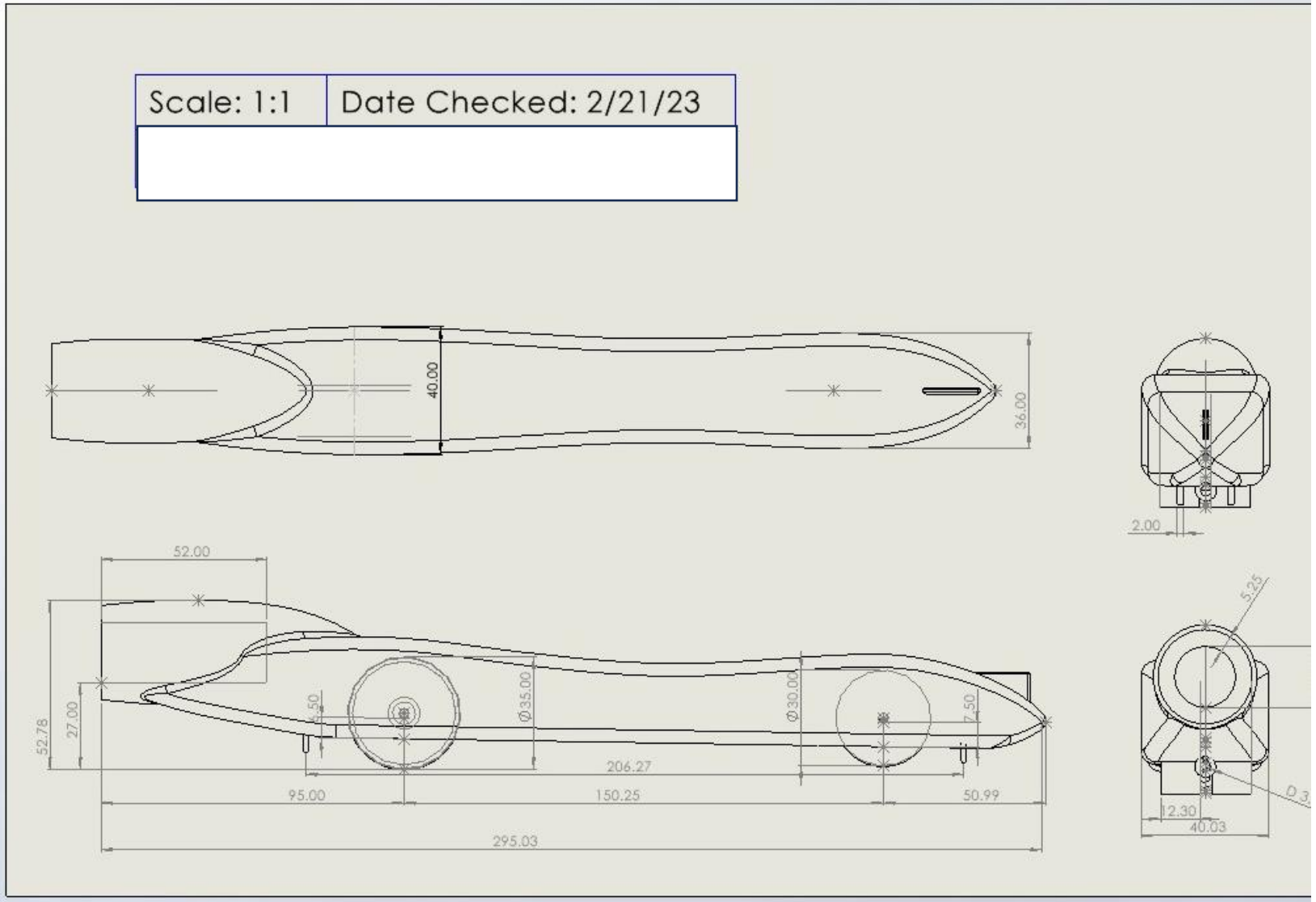

Drawing

- The drawing was also created in Solidworks.
- It uses a 1:1 scale and has all dimensions listed in the CEG.

CNC Machining and Sanding

- The dragster was cut out using a CNC machine.
- The dragster was then sanded and part of the dragster that was not cut out by the CNC machine was removed.

Painting

- The dragster was painted with Dupli-Color paint and primer.
- The dragster has a total of five cans of paint and primer, along with some clear coat.